VTFC50 - Thermal Gas Mass Flowmeter

- Tube Diameter:DN10...DN300
- Used for gas flow measurement, but also for process control
- No temperature and pressure compensation
- No moving parts
- Range ratio wide, high precision, high reliability
- Simple installation and easy operation
- Low pressure loss

The thermal mass flowmeter adopts the principle of thermal diffusion, which is a technology with excellent performance and high reliability under harsh conditions. Typical sensing elements include two thermal resistors (platinum RTD), a speed sensor and a temperature sensor that automatically compensates for changes in gas temperature. When the two RTDS are placed in a medium, where the velocity sensor is heated to a constant temperature above the ambient temperature, the other temperature sensor is used to sense the medium temperature. The mass flow of gas through the velocity sensor is calculated by the heat transfer of the sensing element. As the gas velocity increases, the heat carried away by the medium increases. The temperature of the sensor decreases accordingly. In order to maintain a constant temperature, the working current through the sensor must be increased, and this increased portion of the current is not proportional to the velocity of the medium.

Specifications

Inner diameter DN	DN10...DN300
Applicable Medium	Air, natural gas, hydrogen, oxygen, chlorine, nitrogen, argon, ammonia, methane, gas, phosgene, flue gas, etc
Measuring Range	0.4...100m/s
Accuracy	Level 1, Level 1.5
Repeatability	±0.25% of the measured value
Power supply	220VAC±10%; 24VDC±10%
Output	Current:4...20mA, HART,RS485 Pulse:Frequency0-1KHZ
Working pressure	DN10—DN50: ≤4.0Mpa DN65—DN200: ≤1.6Mpa DN250—DN300: ≤1.0Mpa
Sensor Materials	316SS(1.4404)、Ceramics
Junction box shell material	Cast aluminium
Flange, Housing Material	Carbon steel, Stainless steel (custom)
Response Time	<100ms
Responsivity	<0.05m/s
Medium Temperature	-20℃...120℃,-20℃...250℃
Ambient Temperature	Sensor -25℃~60℃;
Ambient Humidity	≤85%RH（20℃）
Power Consumption	<20W
Structure	One piece, two pieces
Electrical Conhection	M20×1.5
Earthing mode	Pipe grounding
Explosion-proof	EXd ⅡCT2...6
Process Connection	Flange connection (according to international GB9115-88)
Protection Class	IP65

Applications

- Air/gas/natural gas measurement
- Water treatment
- Petrochemical industry
- Power plant
- Metallurgical industry
- Oil/Gas industry

Medium

Gas

Limitation of hot gas flowmeter

- Thermal gas mass flowmeters are not suitable for measuring liquids
- For more water content of the gas can not be accurately measured

Structural style

All-in-one:
Sensor does not convert to form a whole, easy wiring, and no cable outside interference is small. But it is not suitable for installation in high or is not easy to view and high temperature or large vibration occasions

Split:
The sensor is installed separately on the pipeline, and the converter is installed several meters or even more than 100 meters apart, which is suitable for harsh environment site

Advantages of hot gas flowmeter

There are no moving parts in the measuring tube for easy maintenance and management, so the service life of the sensor is long: open flow parts, so no pressure loss
The thermal gas mass flowmeter is a kind of instrument to measure volume flow. The measurement results are independent of velocity distribution, fluid pressure, temperature, density, viscosity and other physical parameters
Hot gas mass flowmeter is a kind of volume flow meter, can measure corrosive media, body material and probe can choose tantalum material
Diverse structure, flexible installation, convenient loading and unloading, easy to use
Anti-explosion and anti-corrosion design, suitable for harsh environment and dangerous occasions
The converter has reliable performance, high precision, low power consumption, zero stability, convenient parameter setting, LCD display, can display the cumulative flow, flow rate, flow percentage and other parameters of high sensitivity, especially suitable for large diameter, low flow rate measurement
High definition backlit LCD display, all Chinese menu operation, easy to use, simple operation, easy to learn and understand
The 16-bit embedded microprocessor is adopted, which has fast computation speed, high precision, programmable frequency and low frequency rectangular wave excitation, which improves the stability of flow measurement and low power consumption
Full digital processing, strong anti-interference ability, reliable measurement, high precision, flow measurement range can reach 1000:1
Ultra-low EMI switching power supply, wide range of power supply voltage, good anti-EMC
With RS485, RS232, Hart and Modbus digital communication signal output

Detail the main technical parameters

Applicable medium:

Air, natural gas, hydrogen, oxygen, chlorine, nitrogen, argon, ammonia, methane, gas, phosgene, flue gas, etc

Gas	Density（kg/m3）
Air (dry)	1.2928
Nitrogen	1.2506
Oxygen	1.4289
Fluorine	1.784
neon	0.9
Ammonia	0.771
Carbon Monoxide	1.2504
Carbon Dioxide	1.977
Acetylene	1.1717

Gas	Density（kg/m3）
Ethylene	1.2604
Propylene	1.914
Methan	0.7176
Ethane	0.3567
Propyne	2.005
Butyne	2.703
Natural gas	0.802
Coal gas	0.802

Detail the main technical parameters

Measuring range: 0.4-60m /s

Under normal circumstances, the selection of mass flow timing should make the flow rate v in 1... The measurement range of 50 m/s is ideal.

Under the condition that the range Q has been determined, the diameter D of the flowmeter can be determined according to the above range of flow velocity V. The formula for calculating the flow velocity is as follows:

(1) v = 1273. 24 * Q / DN2

Unit:

v： [m /s]

Q： [l/s]

DN： [mm]

(2) v = 353.68 * Q / DN2

Unit:

V： [m /s]

Q： [m 3/h]

DN： [mm]

Note: Q: flow rate; DN: pipe diameter; V: flow rate

Accuracy: ≤±1%, ≤±1.5% reference conditions are as follows

The reference conditions for precision calibration are as follows:

Project	Parameter
Medium temperature	20 ℃ ± 3 ℃
Ambient temperature	21 ℃ ± 3 ℃
Pressuring	1 bar
Power Supply	24±1%
Stabilization time	25 minutes
Straight pipe section (inlet)	10 x DN (DN ≤ 1200/48") 5 x DN (DN > 1200/48")
Straight pipe section (outlet)	5 x DN (DN ≤ 1200/48") 3 x DN (DN > 1200/48")
Fluid state	Uniform flow distribution

Accuracy Curve of mass flowmeter system (±1%)

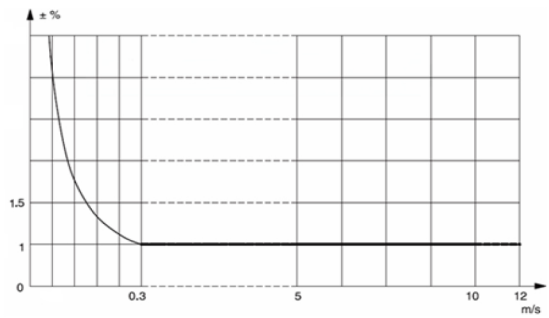

Accuracy Curve of mass flowmeter system (±1.5%)

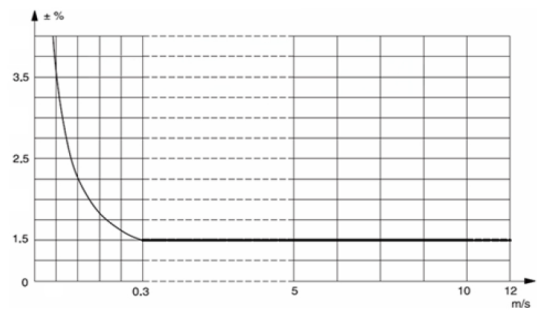

FLOW

Dimensions

One-piece dimensional drawing（mm）

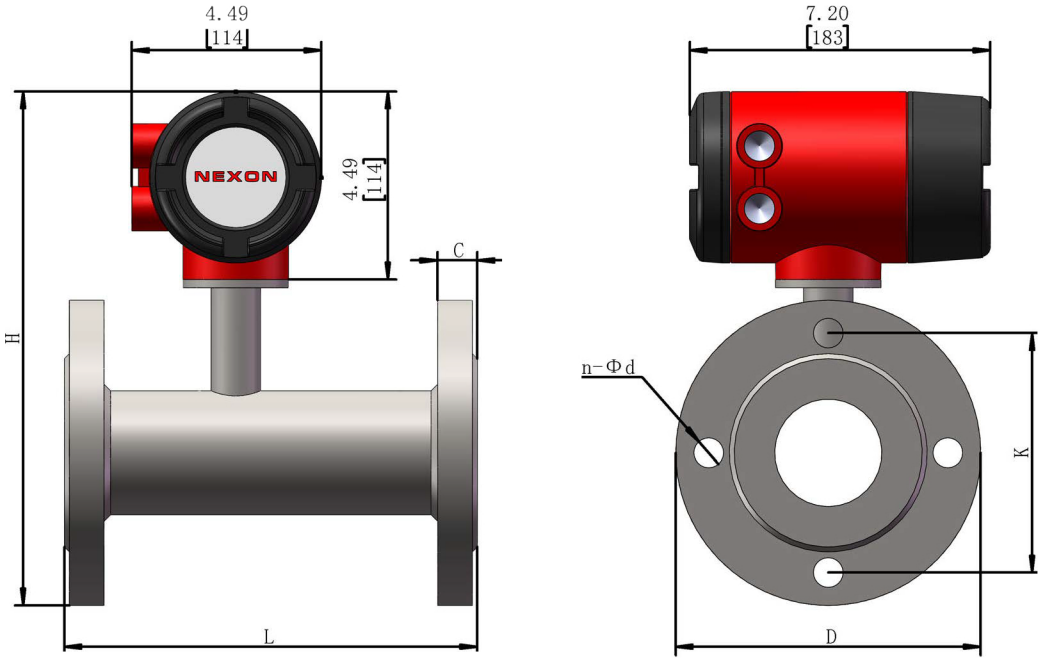

Dimensions

DN	L	H	D	K	n-Ød	C
DN10	200	210	90	60	4-Ø14	14
DN15	200	215	95	65	4-Ø14	14
DN20	200	225	105	75	4-Ø14	16
DN25	245	231	115	85	4-Ø14	16
DN32	245	245	140	100	4-Ø18	18
DN40	245	254	150	110	4-Ø18	18
DN50	245	296	165	125	4-Ø18	20
DN65	300	324	185	145	4-Ø18	20
DN80	300	339	200	160	8-Ø18	20
DN100	300	366	235	180	8-Ø18	22
DN125	300	386	250	210	8-Ø18	22
DN150	350	416	285	240	8-Ø18	24
DN200	350	469	340	295	12-Ø22	26
DN250	400	547	395	350	12-Ø22	26
DN300	500	599	445	400	12-Ø22	28

Model Number

OrderNO.	Type	DN	Measuring range Nm^3/h	Pressure Mpa
VTFC0010	VTFCM50/DN10ACBKS400ADP	10	0.12...28	4
VTFC0015	VTFCM50/DN15ACBKS400ADP	15	0.3...60	
VTFC0020	VTFCM50/DN20ACBKS400ADP	20	0.5...110	
VTFC0025	VTFCM50/DN25ACBKS400ADP	25	0.7...175	
VTFC0032	VTFCM50/DN32ACBKS400ADP	32	1.2...290	
VTFC0040	VTFCM50/DN40ACBKS400ADP	40	2...450	
VTFC0050	VTFCM50/DN50ACBKS400ADP	50	3...700	
VTFC0065	VTFCM50/DN65ACBKS160ADP	65	5...1200	1.6
VTFC0080	VTFCM50/DN80ACBKS160ADP	80	8...1800	
VTFC0100	VTCM50/DN100ACBKS160ADP	100	12...2800	
VTFC0125	VTCM50/DN125ACBKS160ADP	125	20...4400	
VTFC0150	VTCM50/DN150ACBKS160ADP	150	30...6300	
VTFC0200	VTCM50/DN200ACBKS160ADP	200	50...11300	
VTFC0250	VTCM50/DN250ACBKS100ADP	250	100...17600	1
VTFC0300	VTCM50/DN300ACBKS100ADP	300	150...254000	

Dimensions

Split dimensional drawing

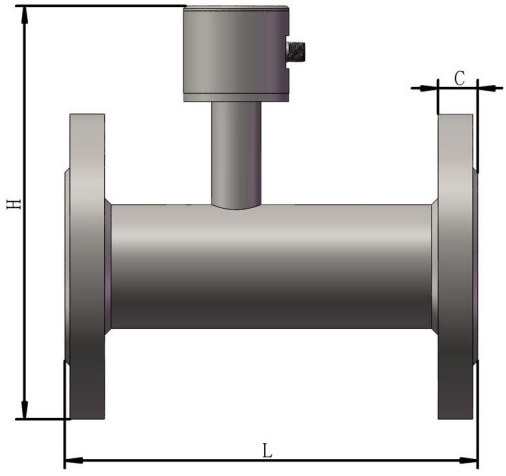

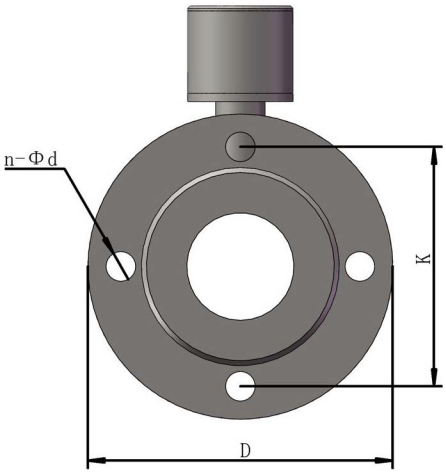

Dimensions inch[mm]

DN	L	H	D	K	n-Ød	C
DN10	200	153	90	60	4-Ø14	14
DN15	200	158	95	65	4-Ø14	14
DN20	200	168	105	75	4-Ø14	16
DN25	245	174	115	85	4-Ø14	16
DN32	245	188	140	100	4-Ø18	18
DN40	245	197	150	110	4-Ø18	18
DN50	245	207	165	125	4-Ø18	20
DN65	300	217	185	145	4-Ø18	20
DN80	300	222	200	160	8-Ø18	20
DN100	300	259	235	180	8-Ø18	22
DN125	300	279	250	210	8-Ø18	22
DN150	350	309	285	240	8-Ø18	24
DN200	350	352	340	295	12-Ø22	26
DN250	400	440	395	350	12-Ø22	26
DN300	500	492	445	400	12-Ø22	28

Model Number

OrderNO.	Type	DN	Measuring range Nm^3/h	Pressure Mpa
VTFC1010	VTCM50A/DN10ACBKS400ADP	10	0.12...28	4
VTFC1015	VTCM50A/DN15ACBKS400ADP	15	0.3...60	
VTFC1020	VTCM50A/DN20ACBKS400ADP	20	0.5...110	
VTFC1025	VTCM50A/DN25ACBKS400ADP	25	0.7...175	
VTFC1032	VTCM50A/DN32ACBKS400ADP	32	1.2...290	
VTFC1040	VTCM50A/DN40ACBKS400ADP	40	2...450	
VTFC1050	VTCM50A/DN50ACBKS400ADP	50	3...700	
VTFC1065	VTCM50A/DN65ACBKS160ADP	65	5...1200	1.6
VTFC1080	VTCM50A/DN80ACBKS160ADP	80	8...1800	
VTFC1100	VTCM50A/DN100ACBKS160ADP	100	12...2800	
VTFC1125	VTCM50A/DN125ACBKS160ADP	125	20...4400	
VTFC1150	VTCM50A/DN150ACBKS160ADP	150	30...6300	
VTFC1200	VTCM50A/DN200ACBKS160ADP	200	50...11300	
VTFC1250	VTCM50A/DN250ACBKS100ADP	250	100...17600	1
VTFC1300	VTCM50A/DN300ACBKS100ADP	300	150...254000	