VTFM200-Mini Electromagnetic Flow Meters

- **Compact design saves installation space**
- **Corrosion resistance sensor technology**
- **All electronic design with no moving parts**
- **Automatic viscosity temperature compensation**
- **Pulse output/analog output is optional**
- **Low pressure loss**
- **Resistant to contamination**

According to Faraday's principle of electromagnetic induction when a conductor passes vertically through magnetic field B, it will induce a voltage. U In the measurement of the flowmeter, the moving conductor is a flowing conducting medium, and the magnetic field B is emitted from the direction perpendicular to the flowing medium. The induced electromotive force U on the two electrodes E1 and E2 is directly proportional to the velocity V of the medium.

U=K×B×V×D

K- meter constant

D- Internal probe spacing

The induced electromotive force U is further processed and converted into a standard electrical signal for output or display

Specifications

Measuring Range	0.01...100L/Min
Nominal diameter	DN6...DN25(See selection table)
Applicable medium	Conducting liquid (conductivity > 20uS/cm)
Accuracy	≤±1% range
Repeatability	≤±0.2% range
Proof pressure	16 bar
Operating voltage	24±10%Vdc
Current consumption	≤80mA
Electrical Protection	Reverse polarity protection, short circuit protection
Output	
Pulse output	NPN output, pull up resistor 2K
Analog output	4... 20mA, current limit 26mA, load resistance < 250Ω
Response Time	＜500ms
Ambient Temperature	-25...85℃
Medium Temperature	-40...100 No hot or cold shock
Materials	
Electrode	Stainless Steel 316TI
Process Connection	Stainless Steel 316TI
Measuring tube	PEEK
Seal	EPDM
Housing	Stainless Steel 304
Electrical Connection	M12×1 Plug
Process Connection	G External thread, 25.4 chuck, 50.5 chuck

Applications

- Circulating water detection
- Coolant monitoring
- Other conducting liquid monitoring

External thread connection

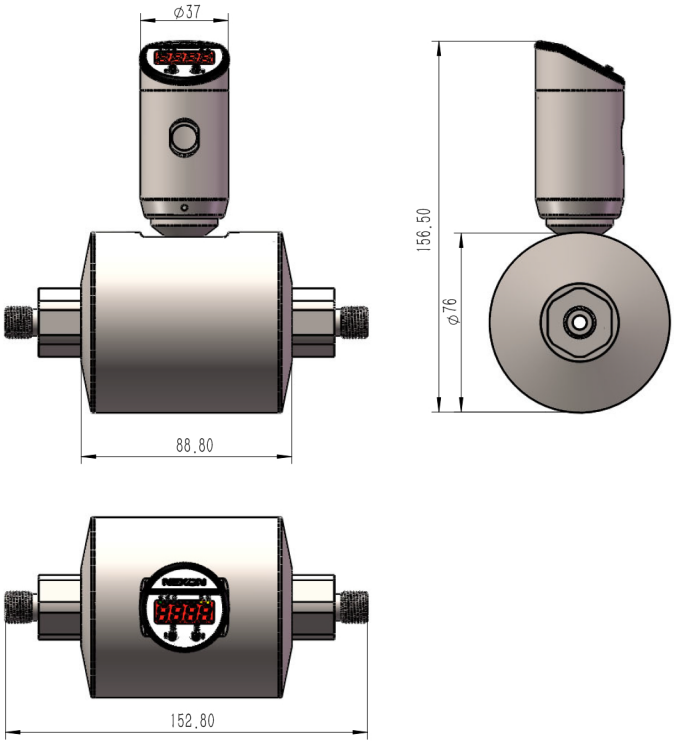

25.4 Sanitary Chuck Connection

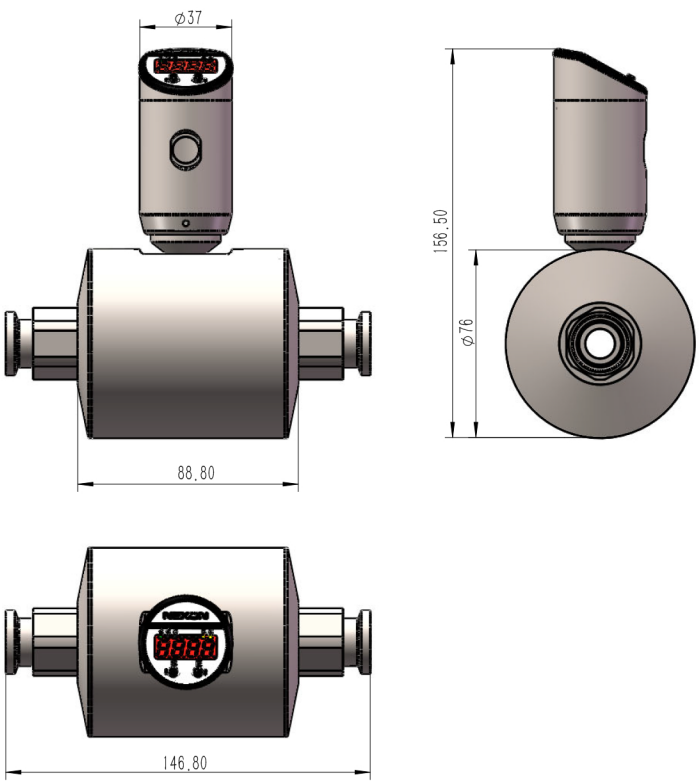

50.5 Sanitary chuck connection

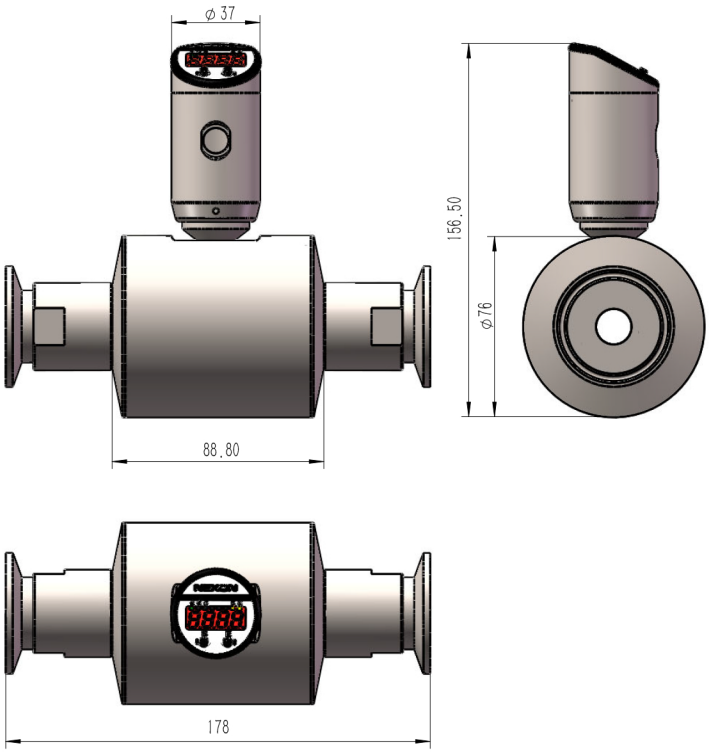

Wiring

Signal	Plug	Cable
U+	1	Brown
U-	3	Blue
Switch output 1	4	Black
Switch output 2	2	White
Analog output (voltage or current)	5	Gray

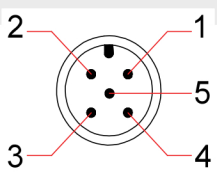

PNP	NPN
2x PNP 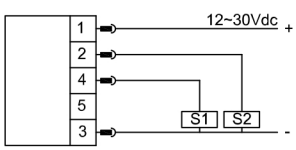	2x NPN 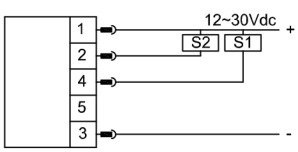
2x PNP + analog output 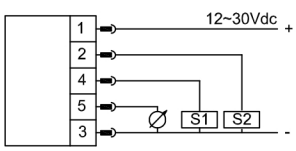	2x NPN + analog output 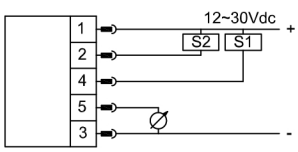

Model Number

OrderNO.	Type	Process connection	Measuring range L/Min	DN
VTFM2006	**VTFM**200GM06	G1/4	0.01-3 L/min	6
VTFM2015	**VTFM**200GM15	G1/2	0.25-25L/min	15
VTFM2020	**VTFM**200GM20	G3/4	0.5-50L/min	20
VTFM2025	**VTFM**200GM25	G1	1-100 L/min	25
VTFM2106	**VTFM**200TR106	25.4 Sanitary chuck	0.01-3 L/min	6
VTFM2115	**VTFM**200TR115	25.4 Sanitary chuck	0.25-25L/min	15
VTFM2120	**VTFM**200TR220	50.5 Sanitary chuck	0.5-50L/min	20
VTFM2125	**VTFM**200TR225	50.5 Sanitary chuck	1-100 L/min	25