VTFV700S - Sanitary Vortex Flow Meter

- **Applicable to food and pharmaceutical industry**
- **Standard tri-clamp connection**
- **Stainless steel structure**
- **Operating temperature up to 250℃**
- **Optional 4...20 mA current output and pulse output**

VTFV700S is based on Karman vortex effect to work. A columnar object that goes through the entire cross-section of the meter tube creates a vortex when a flow ispresent. The frequency of the vortex is proportional to flow **VTFV700S** is specially designed for food sanitation industry and widely used in gas, steam and liquid applications. No moving part; Integral display for instantaneous and tatal flow;4...20mA or pulse output.

Specifications

Measuring Range	0.9-38m3/h
Applicable Medium	Water
Linearity	Waters≤0.7% of measuring range
Repeatability	≤±0.5% of measuring range
Power Supply	10...25Vdc
Current Consumption	≤20mA
Analog output	2-wire 4...20mA
Wiring Protection	Reverse polarity
Ambient Temperature	-20...70℃
Medium Temperature	-40...250℃
Pressure Rating	25bar
Protection Class	IP65
Materials	
Electrical Housing	316L stainless steel
Connection Thread	316L stainless steel
Body	316L stainless steel
Sensor	316L stainless steel
O-ring	NBR
Electrical Conhection	M12x1 plug

Applications

- Food industry
- Pharmaceutical in dustry
- Brewing industry

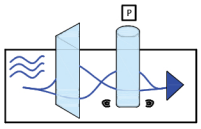

Wiring Diagram 2 Analog Output

Wiring	4...20mA output

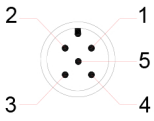

M12 pulg

Signal	Plug	Cable
U+	1	Brown
U-	3	Blue

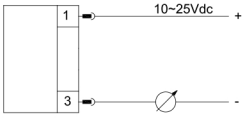

FLOW

Dimensions in inch[mm]

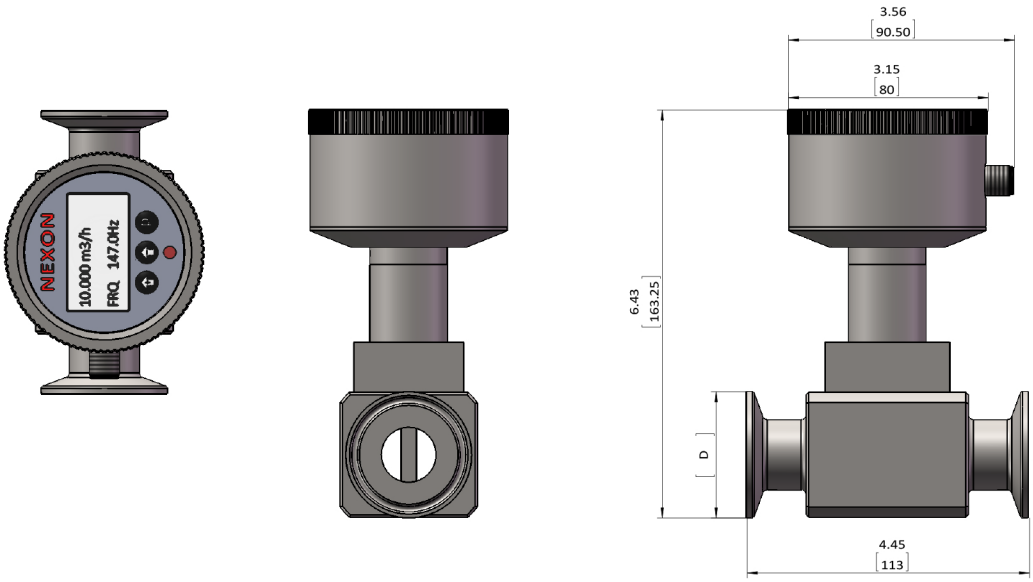

Model Number

OrderNO	Type	DN	Measuring range m3/h	Process connection ChuckD
VTFV7025	VTFVX700SDN25-01ASL010	1"(DN25)	0.9-10m3/h	50.5 Sanitary chuck
VTFV7040	VTFVX700SDN40-112ASL026	1-1/2"(DN40)	2.5-26m3/h	50.5 Sanitary chuck
VTFV7050	VTFVX700SDN50-02ASL038	2"(DN50)	3.5-38m3/h	64 Sanitary chuck