VTST 205 Digital Temperature Switch

Features

The VTST 205digital temperature switch with OLED screen is suitable for temperature measurement environment. The product adopts 304 stainless steel case and plastic case head design, with protection capability up to IP65 level. The product is equipped with a two-stage rotation structure, which can adjust the screen direction to ensure that customers can get a good viewing angle in different installation positions. Equipped with a standard 5-core M12 aviation plug cable, users can directly replace the old mechanical switch.



IP65

Specification

- Equipped with a PT1000 Class A sensor, suitable for various industrial application environments
- Features a high-definition OLED display screen for real-time intelligent monitoring
- Both the head and dial support 330° rotation, facilitating installation and viewing from different positions
- Supports numerical and data trend chart analysis modes

Applications

- Machine tool drive monitoring
- Automated production line
- High speed train
- Hydraulic equipment
- Automatic control equipment
- Other occasions to replace mechanical pressure switches

Accuracy
1 (± 0.5%FS）
Measuring ranges
(-50~100)℃ (-50~150)℃ (-50~200)℃ (-50~300)℃ (0~100)℃ (0~150)℃ (0~200)℃(0~300)℃

Registration No：91110111MAD2MJF42E
www.vortorq.com
235 Yunchuang Road, Jiangling Subdistrict, Wujiang District, Suzhou City China
oceana@vortorq.com
+65 82686819
+86 13691536242

Dimension

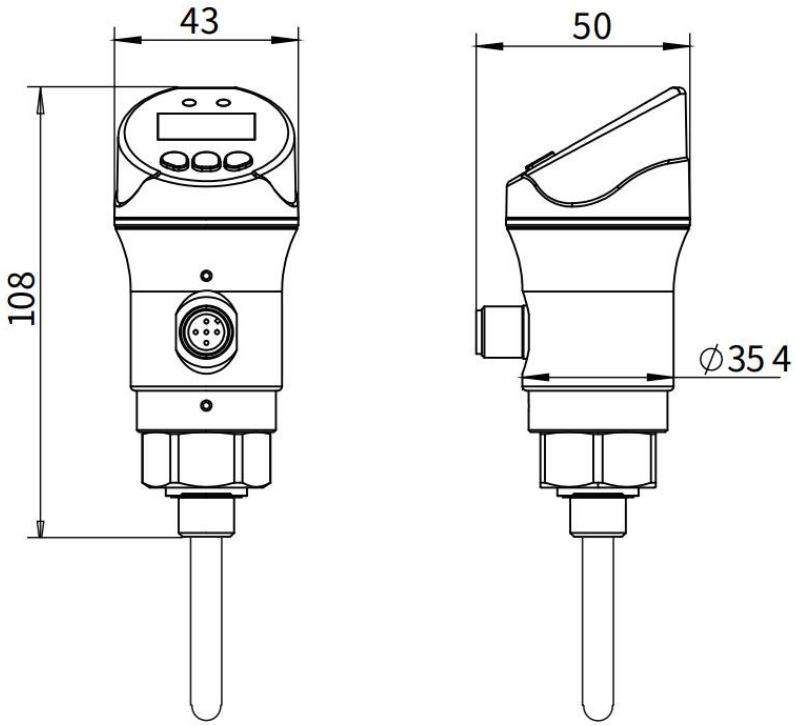

Selection Guide

VTST 205-(0~100)°C - 1	– 2DO1A	– G14	– C625	– F10	– P3	– B3	– T3	– K1	–XXXXXX
Model	Range	Accuracy	Output signal	Connection	Probe length	Sheath diameter	Power supply	Outlet line	Medium temperature	Special specifications	ID Code
VTST 205	(0~100)°C *Refer to the table below	1 (± 0.5%FS)	2DO1A (2-channel switch outputs + 1-charmel4~20mA output) R (RS485 output)	G14 (G1/4) *Refer to the table below	C625 (DIA 6mm L 25mm) *Refer to the table below	F0 (No sheath) F10 (10mm) F12 (12mm) F16(16mm)	P3 (12-28VDC)	B3 (Aviation plug)	T3(-20~80°C)	*Refer to the table below	

Range	(-50~100)°C (-50~150)°C (-50~200)°C (-50~300)°C (0~100)°C (0~150)°C (0~200)°C (0~300)°C	**Notes** 1) The above ranges are standard ones. For customized ranges, please consult the technical engineers of Menkon. 2) Special specifications: K0 (None) K1(Oxygen measurement) K2(Hydrogen measurement) K3(Zinc/copper restricted) K4 (Acid measurement (non-hydrofluoricacid)) K5(With heat sink) K6(Fluorine-coated) K9(Custom specification)
Probe length	C625 (DIA 6mm, L 25mm) C630 (DIA 6mm, L 30mm) C650 (DIA 6mm, L 50mm) C6100(DIA 6mm, L 100mm) C6150(DIA 6mm, L 150mm)	
Connection	EDG14[With Elastomer Seal (ED)G1/4 Thread) EDG12[With Elastomer Seal (ED)G1/2 Thread] G12 (G1/2 Thread) G14 (G1/4 Thread) N12(NPT1/2 Thread) N14(NPT1/4Thread) P12(PT1/2 Thread) P14(PT1/4 Thread)	